MPRT-16

(V1.0)

16 channel low noise preamplifier
with trigger output

MPRT-16 is a state of the art multichannel charge integrating preamplifier. It includes a timing path with discriminators, providing a trigger to start external electronics.
Three output options are available: differential header, unipolar output with header or unipolar output with lemo connectors.
The preamplifier gain can be switched in 4 steps, each multiplying the signal by 2, providing an overall maximum range variation of a factor of 8.

Features:

- 16 channel compact module
- Sensitivity switch, factor 1, 2, 4, 8
- Input protection
- Pulser input
- Bias voltage up to ± 600V
- Header or Lemo output
- NIM-trigger output
- 2 Timing Filter outputs for groups of 8 channels

Schematics:

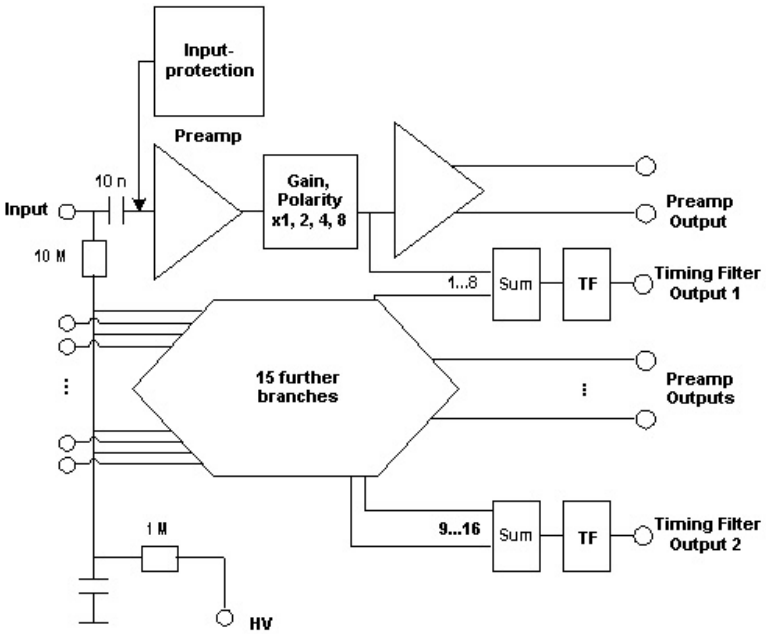

mesytec GmbH & Co. KG
Wernher-von-Braun- Str. 1, D-85640 Putzbrunn, Germany
fon: +49 - 89 / 456007-30 fax: +49 - 89 / 456007-50
info@mesytec.com - www.mesytec.com

Input stage

- Input connector:
  SubD-25 female connector
- Pin assignment:

Function	connector	Function	connector
Sig-gnd	1,2,7,12,13,14,15,25	Cha 9	19
Cha 1	11	Cha 10	6
Cha 2	23	Cha 11	18
Cha 3	10	Cha 12	5
Cha 4	22	Cha 13	17
Cha 5	9	Cha 14	4
Cha 6	21	Cha 15	16
Cha 7	8	Cha 16	3
Cha 8	20	guardring	24

- Positive and negative charge can be amplified equally.
- The guardring output (24) is connected via R-C-R filter (100 kΩ, 10 nF, 100 kΩ) to the common detector bias input.

Sensitivity selection

Rotary switch setting

Example 100 MeV type

setting	maximum range	Required Input Charge
0	12.5 MeV	pos
1	25 MeV	pos
2	50 MeV	pos
3	100 MeV	pos
4	-12.5 MeV	neg
5	-25 MeV	neg
6	-50MeV	neg
7	-100 MeV	neg

Note: The rotary switch setting does not influence the preamp output signal polarity!

Timing Filter Outputs

MPRT provides two timing filter outputs. The signals are generated from the sum of channel 1..8 and 9..16. The signals are negative and are scaled and polarized with the rotary switch setting. Output amplitudes : -1.5V for maximum range in a single channel. The amplitude will vary to some extent with detector capacity and signal risetime.
The timing filter default time constants are: intergating 250 ns, differentiating 450 ns.

Discriminators

MPRT provides a NIM trigger output, which is the ored sum of its 4 leading edge discriminators, working each on the analog timing filter sum of 4 channels. Multiple discriminators are used to provide a high quality, low jitter NIM signal. The discriminators have a common threshold, which can be adjusted via 10- turn potentiometer. The threshold value is available at the sense output. -4.5V correspond to 45% full range of a single channel.

Example:

-1 V threshold voltage in the 25 MeV range means 10% which corresponds to 2.5MeV threshold value.
Note that a pulser applied on all channels (for example when applied to the pulser input) will add up in a group of 4 channels, so a pulser corresponding to 0.65MeV will pass the 2.5MeV threshold and creates triggers !!

Detector bias input

- Lemo connector
- Maximum voltage ±400 V
- When detector side must be on ground level: terminate bias input with 50 Ω

Ground connection

- Ground screw on rear side

Output stage:

- Differential output for twisted pair 34 pin male header connector.
- Output amplitude: 0 to ±4 V (terminated: ± 2 V)
- For the unipolar 4 V output: 4 V unterminated, 2V terminated with 50 Ohm (positive input charge -> positive output voltage)
- Pin assignment of output connector:
- pin 1, 2 channel 1, pin 3, 4 channel 2...
- pin 33, 34 output ground

mesytec GmbH & Co. KG
wernher-von-braun- str. 1, 85640 putzbrunn, germany
fon: +49 - 89 / 456007-30, fax : +49 - 89 / 456007-50
info@mesytec.com - www.mesytec.com

Rise and decay time:

Standard decay time is 35 µs.
Risetime is 10 ns for 0 pF input capacity.

Noise

For the MPRT-16 series, power modes can be selected by a jumper on the PCB.
High Power mode reduces noise, while low Power mode may be useful for in vacuum use.

power mode	shaping time	MPRT16-25 MPRT16-100
	σ / FWHM [us]	noise [keV]
LP	0.4 / 1	(5 + 0.06/pF)
	1 / 2.5	(4 + 0.04/pF)
HP	0.4 / 1	(5 + 0.04/pF)
	1 / 2.5	(4 + 0.027/pF)

Pulser input

The pulser is internally distributed to individual charge termination capacities. Tolerances +-10%.

MPRT16-25	MPRT16-100	MPRT16 -300	MPRT16 -1000
0.78pF 17 MeV/V	0.78 or 1.13 pF = 17 MeV/V or 25 MeV/V	2.4pF 50 MeV/V	10.2pF 230 MeV/V

Detector bias input

- Lemo connector
- Maximum voltage ±600 V
- When connected detector side must be on ground level: terminate bias input with 50Ω Lemo terminator.

Pinout of on board power connector for PCB version:

- gnd: 1,3, 11
- +12V: 7
- +6V: 5
- -6V: 9
- TF_out_0: 10
- TF_out_1: 12
- LED+: 13 ("power ok" LED)
- LED-: 14

Power consumption for 16 channels:

Parameter	MPRT16-25 MPRT16-100	MPRT16-300 MPRT16-1000
	current [mA]	
LP/HP +6V	80	80
LP/HP -6V	80	80
LP +12V	50	-
HP +12V	100	50
total power LP-mode	1.6 W	-
total power HP-mode	2.2 W	1.6W

LP= low power mode, HP = high power mode

Cooling

Due to the low power consumption cooling is not necessary.
For **in vacuum use**, select low power mode if possible. The power of a single PCB can be dissipated without problems. If several PCBs are densely packed, heat conducting metal shields should be placed in between the PCBs.
Avoid to warm up silicon detectors by the dissipated power.

Power connector:

SubD9 connector:

- 1, 2 = gnd
- 3 = +6 V
- 4 = +12 V
- 5 = -6 V

Power supply:

+6V, 80 mA
-6V, -80 mA
+12V, +100 mA

Dimensions:

- Length: 173 mm (without connectors)
- Width: 105 mm
- Height: 46 mm

mesytec GmbH & Co. KG
wernher-von-braun- str. 1, 85640 putzbrunn, germany
fon: +49 - 89 / 456007-30, fax : +49 - 89 / 456007-50
info@mesytec.com - www.mesytec.com